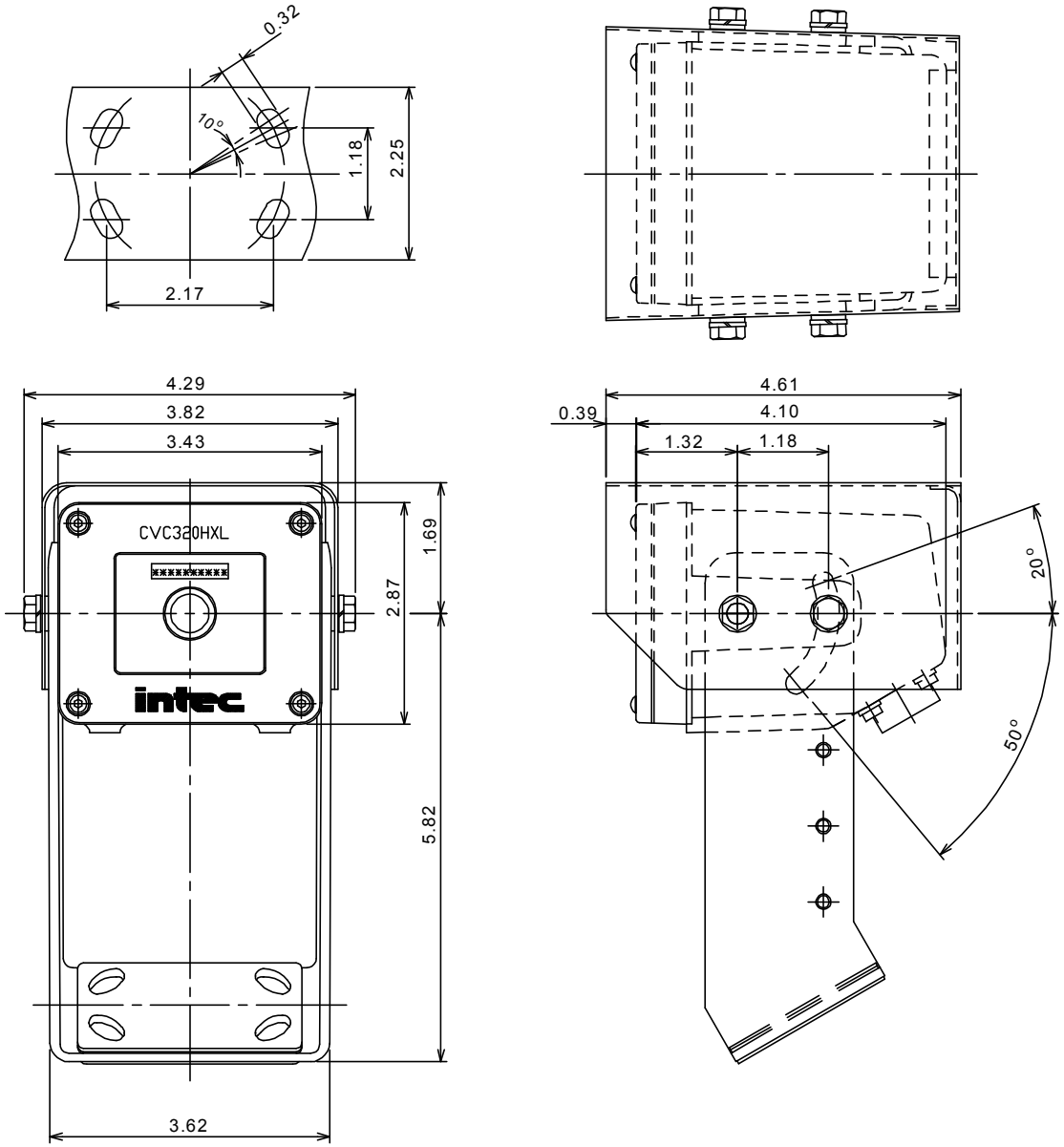

Revisions							
Rev	Description	Date	intec video systems, inc.	23301 Vista Grande Laguna Hills, CA 92653 949-859-3800	4256 State Route 51 North Belle Vernon, PA 15012 724-929-5500	Dimensions shown are in inches	Title: CVC320XL Series Demensional
						0 ~ 0.50 ± 0.02	THIS DOCUMENT CONTAINS CONFIDENTIAL PROPRIETARY INFORMATION. IT SHALL NOT BE USED, DISCLOSED, OR REPRODUCED IN WHOLE OR IN PART WITHOUT WRITTEN PERMISSION FROM INTEC VIDEO SYSTEMS, INC.
						0.50 ~ 2.00 ± 0.04	
						2.00 ~ 4.00 ± 0.08	
			Prepared By KEB	Date 05/24/07		4.00 ~ 20.00 ± 0.12	PRINTED COPIES ARE UNCONTROLLED
			Approved By DN II	Date 06/28/07		20.00 ~ 40.00 ± 0.16	ALWAYS USE WORK INSTRUCTIONS OF SAME REVISION LEVEL
						40.00 ~ ± 0.25	
							Model: CVC320XL Series — REV A
Customer:			Form Number: Intec 001	Date: 06/11/07			